HAND PALLET TRUCK ACCESSIBLE TILTERS

E-Z REACH ROLL-ON™ TILTER

With fork channels that allow either hand pallet trucks or fork trucks to place containers directly on the tilter in a single step, the Roll-On E-Z Reach is designed for stationary installation at work stations.

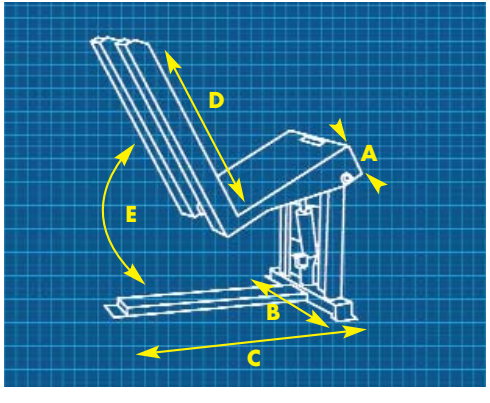

MODEL NO.	CAPACITY	A MAST DEPTH	B OVERALL WIDTH	C OVERALL LENGTH	D FORK LENGTH	FORK OUT TO OUT	FORK WIDTH	E TILT	POWER	APPROX. SHIPPING WEIGHT
ZTU-2	2000 lbs.	7"	42"	47"	40"	29"	8"	85°	115/1/60	650 lbs.
ZTU-4	4000 lbs.	7"	42"	47"	40"	29"	8"	85°	115/1/60	700 lbs.

Units are furnished with either push-button or foot switch control.